Valva aer de siguranta

INFO

S6505/ . . .

Valva de aer de siguranta **S6505/...** a firmei WEMA, ofera solutia perfecta pentru toate problemele aparute pana in prezent cu valvele altor marci in matritele de injectie. Prin noua valva de aer, este complet exclus blocarea jetului de aer sau bruiajul valvei prin patrunderea plasticului.

Caracteristici:

- Buna functionare este asigurata in orice moment, si la problemele cu alimentarea cu aer.
- Nu este posibil infundarea jetului de aer.
- Sunt evitate timpii de oprire costisitoare
- Partile sunt prelucrate cu precizie pentru toleranțe mici.
- Instalare usoara
- Presiunea maxima: 10 bar.
- Brevetat

Safety-Air Valve

INFO

The WEMA-Safety air valve **S6505/...** offers the perfect solution to all problems encountered so far with other brands of valves in injection moulds. Blocking of the air jets or jamming of the valve by penetrating plastic with the new air valve completely excluded.

Features:

- Proper functioning is ensured at all times, also at problems with the air supply.
- No clogging of the air jets possible.
- Cost-intensive downtimes are avoided.
- Precision part machined to close tolerances.
- Easy installation.
- Max. pressure: 10 bar.
- Patent pending.

Modul de functionare:

In cazul in care se blocheaza valva de aer sau daca exista inca presiune de aer (eroare de control), in timpul miscarii de inchidere a matritei, pistonul este impins inapoi pana cand orificiile de evacuare a aerului sunt complet inchise (Fig. 1)

Method of operation:

In case the air valve jams or air pressure supply is still on (control error), during the closing movement of the mould the piston is pushed back until the air outlet holes are completely shut off. (Fig. 1)

① 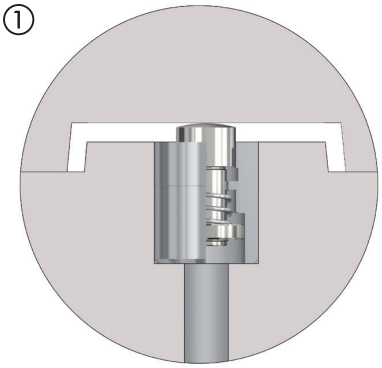

In timpul injectarii, fluxul materialului plastic impinge pistonul in pozitia initiala. (Fig. 2)

During the injection phase the flow in of plastic material is pressing the piston into home position. (Fig. 2)

② 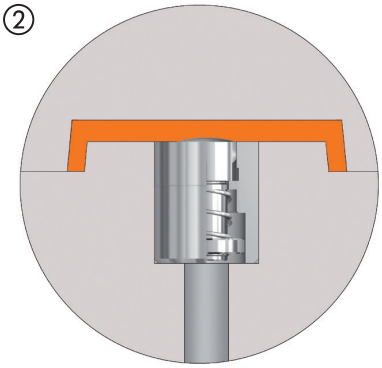

La inceputul operatiunii de aruncare, valva de aer se deschide si trece presiunea de aer. Datorita aerisirii suplimentare este asigurata o aruncare sigura mai ales la produsele goale, cu volum mare. (Fig. 3)

With beginning of demoulding operation the air valve opens, air pressure flows through the air jets. Due to the additional air venting a secure demoulding action is achieved especially on large-volume, hollow mouldings. (Fig. 3)

③ 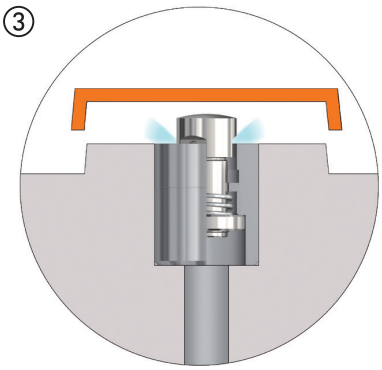

Valva aer de siguranta

Air Valve with Needle

S6505/ . . .

Mat.: AISI 420, otel inoxidabil, 50+5 HRc

Mat.: AISI 420, stainless, 50+5 HRc

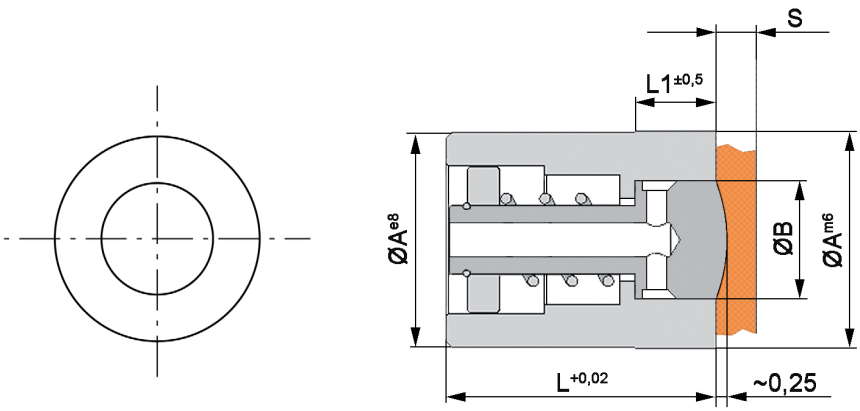

A	B	L	L1	S*	Nr. / No.
8	5	12	**4**	1	**S6505/ 8**
12	7	14	**5**	1,5	**12**
16	10	20	6	2,5	**16**

S*= grosimea de perete maxima a produsului injectat S*= max. wallthickness of moulding

Instructiuni de montare:

Asamblarea se efectueaza intr-o gaura blindata cu toleranta H7. Pentru o presare corespunzatoare, este recomandat utilizarea unui cilindru de cupru cu o gaura corespunzatoare (a se vedea figura de mai jos). Acest lucru va evita deteriorarea pistonului convex.

Mounting instructions:

Assembling is done into a blind hole with H7-tolerance. For proper pressing it is recommended to use a cylinder of copper with a corresponding hole (see figure below). This will avoid damage of the convex piston.

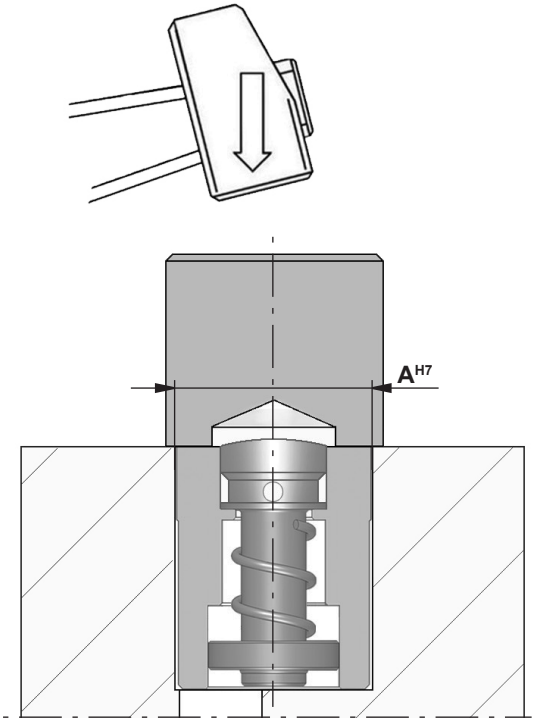

DELORTECH - Sisteme de incalziri si raciri industriale - Industrial heating and cooling systems
Aleea Ciocarliei nr. 3/14, 530164 Miercurea Ciuc, HR/RO +40-745-915 912, +40-755-086 086 +40-266-317 243 info@delortech.ro www.delortech.ro